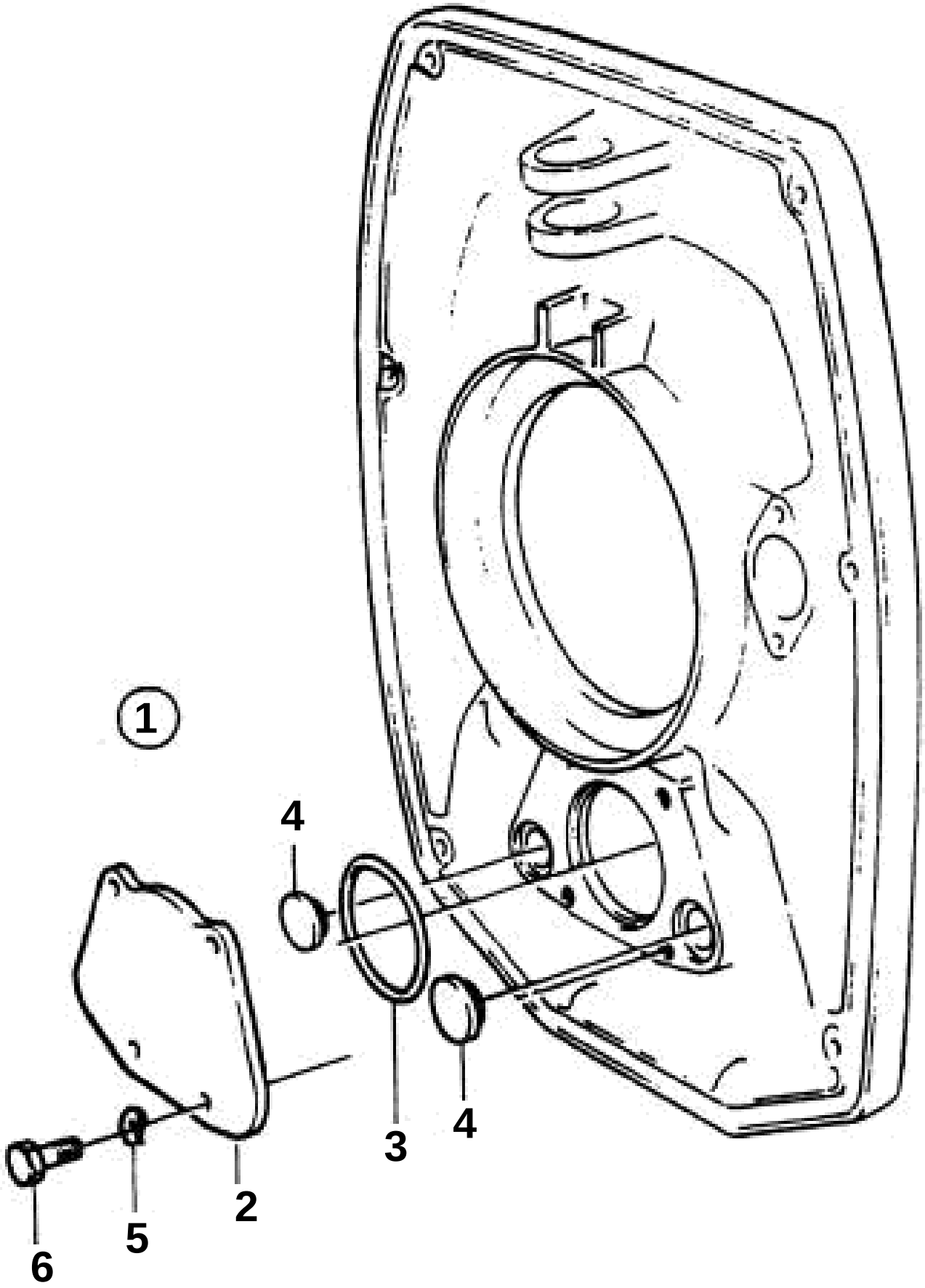
1
4
4
3
2
5
6

DP, DPX - EXHAUST BLOCK-OFF PLATE

REF	PART NO.	QTY	DESCRIPTION
1	872238	1	Seal flange kit
2	854651	1	· Seal flange
3	925256	1	· O-ring
4	814473	2	· Rubber plug
5	941908	4	· Spring washer
6	970945	4	· Screw